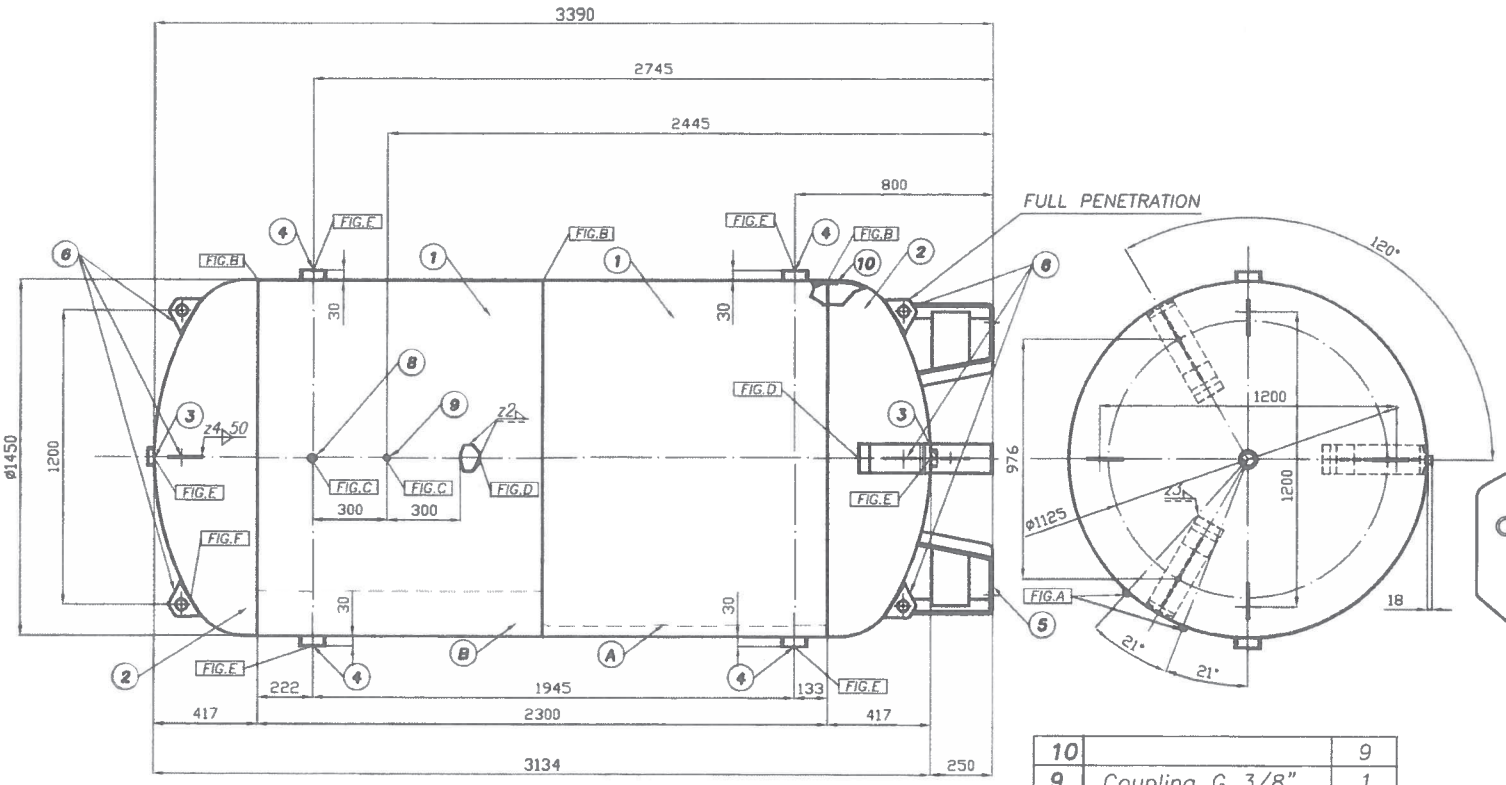


CSC SRL
STR. CACCIOLO 34
15030 TERRUGGIA ITALY
CE PS 12 BAR
V 5000 L PT 17.2 BAR
TSMIN- 20° C TSMAX+ 80° C
TYPE 50V012
FLUID GR.1
NF. B

| Pos. | Description | Q.ty |
|---|---|---|
| 10 | | 9 |
| 9 | Coupling G 3/8" | 1 |
| 8 | Coupling G 3/4" | 1 |
| 7 | Name plate | 1 |
| 6 | Eyebolt | 7 |
| 5 | Leg | 3 |
| 4 | Coupling G 3" | 4 |
| 3 | Coupling G 2" | 2 |
| 2 | Elliptical head | 2 |
| 1 | Shell | 2 |

| REV. | REASON OF REVISION | DATE | SIGN. |
|---|---|---|---|
| 05 | DIVISA VIROLA E AGG. Q.TA' PART.10 | 27/06/22 | M. ROSSI |
| 04 | AGGIORNATA Q.TA' PARTICOLARE 10 | 09/05/16 | M. ROSSI |
| 03 | AGGIORNATO CODICE FONDO | 07/04/16 | M. ROSSI |
| 02 | REVISIONE GENERALE | 03/03/14 | M. ROSSI |
| 01 | CORRETTA FIG. SALDATURA POS. 3 | 07/03/13 | M. ROSSI |

| | PREPARED | APPROVED | REVIEWED |
|---|---|---|---|
| DATE | 10/04/12 | | |
| SIGNATURE | M. ROSSI | | |

REPLACE DRAWING: VES02663.r04

TOLERANCES, IF NOT INDICATED, ACCORDING TO: C-G SE 03.03/3

SHEET A3

SCALE 1:20

AIRPRESS compressoren

LT 5000 PD 12 BAR
-STANDARD-

DRAWING No. VES02663

REV. 05