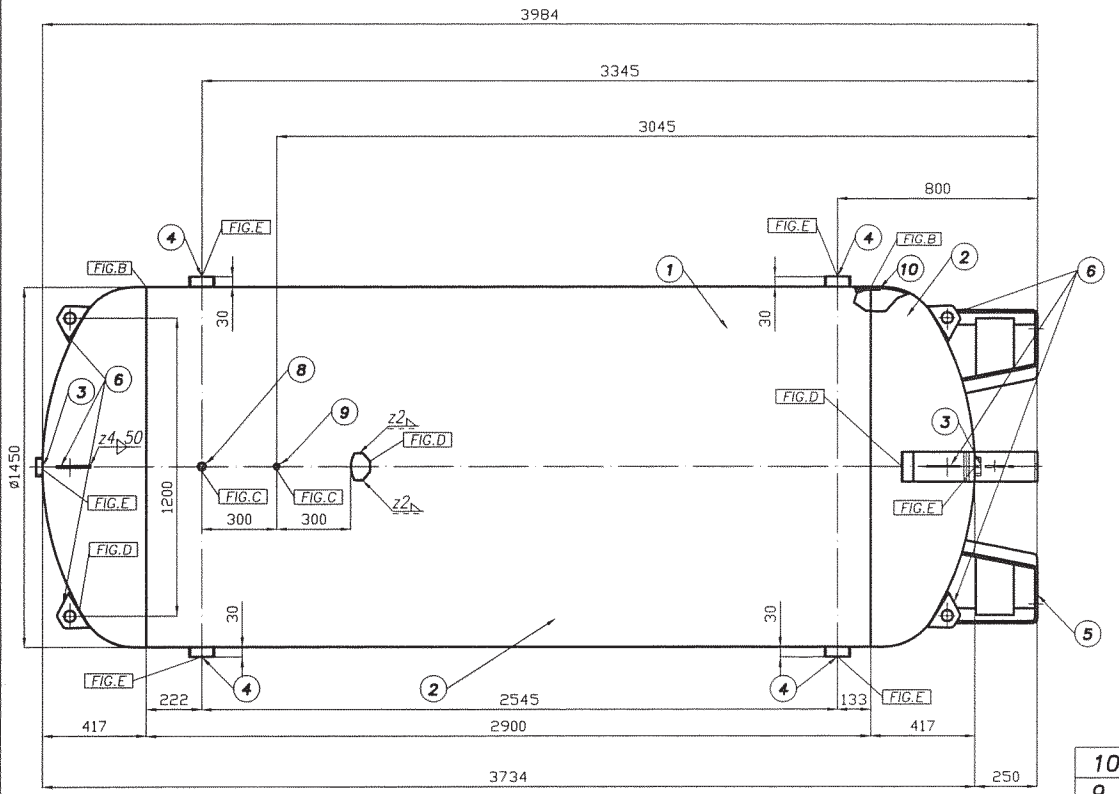

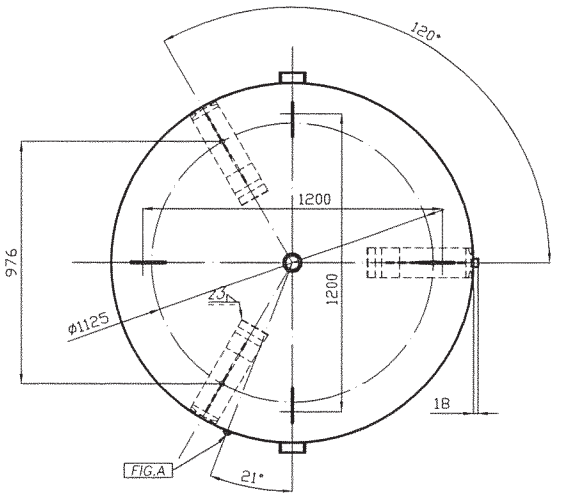

Pos.	Description	Q.ty
10		6
9	Coupling G 3/8"	1
8	Coupling G 3/4"	1
7	Name plate	1
6	Eyebolt	7
5	Leg	3
4	Coupling G 3"	4
3	Coupling G 2"	2
2	Elliptical head	2
1	Shell	1

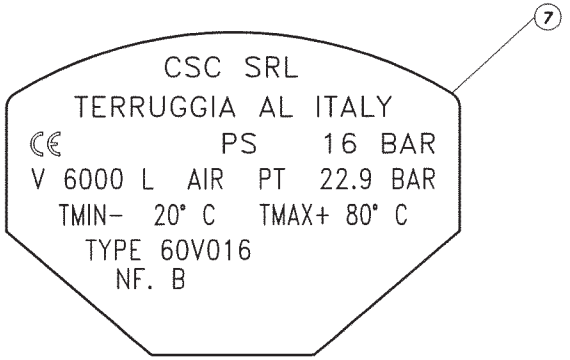

REV.	REASON OF REVISION	DATE	SIGN.
04	AGGIORNATO Q.TA' PARTICOLARE 10	12/05/16	M. ROSSI
03	AGGIORNATO CODICE FONDO	18/11/15	M. ROSSI
02	REVISIONE GENERALE	03/03/14	M. ROSSI
01	CORRETTA FIG. SALDATURA POS. 3	22/02/13	M. ROSSI

	PREPARED	APPROVED	REVIEWED
DATE	10/04/12		
SIGNATURE	M. ROSSI		

REPLACE DRAWING: VES02668.r03

TOLERANCES,IF NOT INDICATED,ACCORDING TO: C-G SE 03.03/3

SHEET A3

SCALE 1:20

AIRPRESS compressoren

LT 6000 PD 16 BAR
-STANDARD-

DRAWING No. VES02668

REV. 04