compressoren

APS 15 IVR X G3

REF. NO.: 369415-IVR-G3

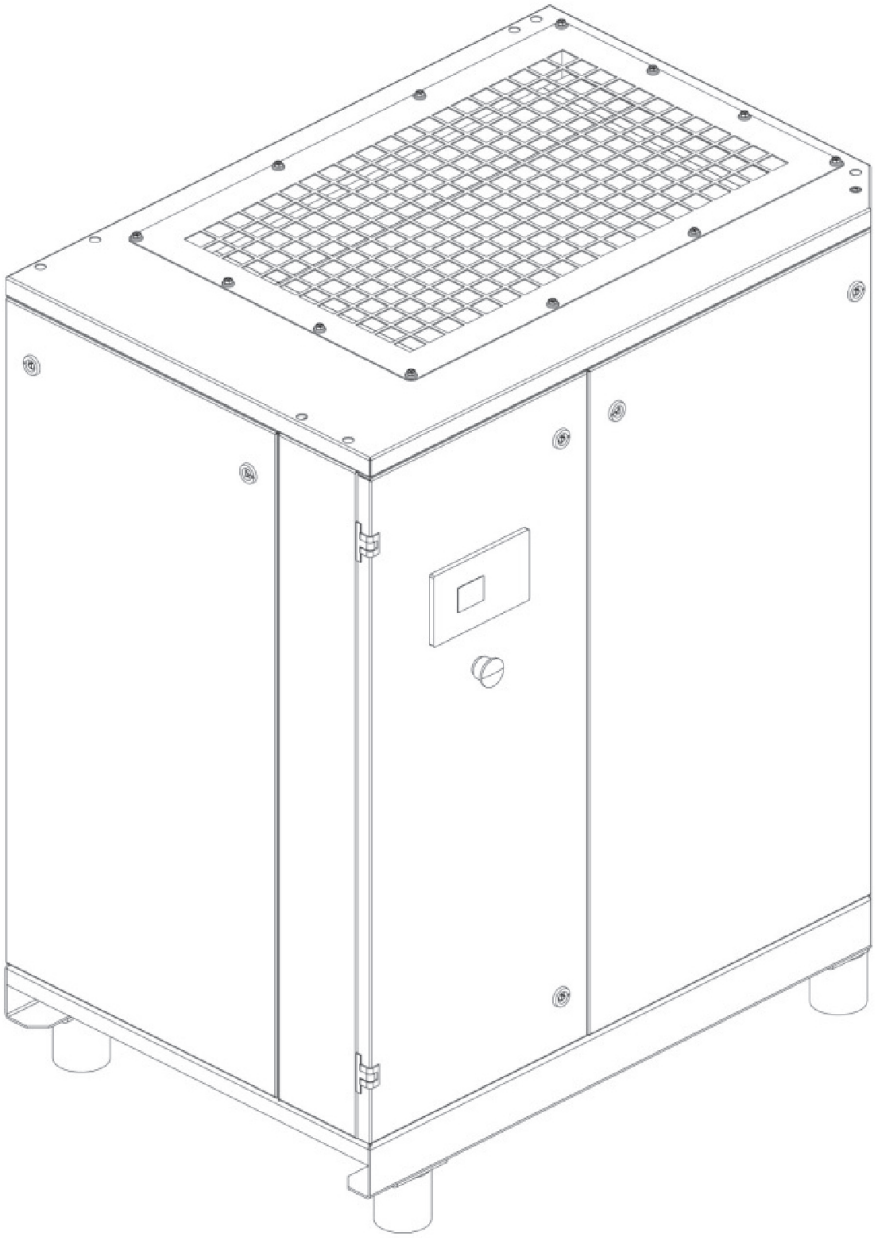

COMPLETE CABIN

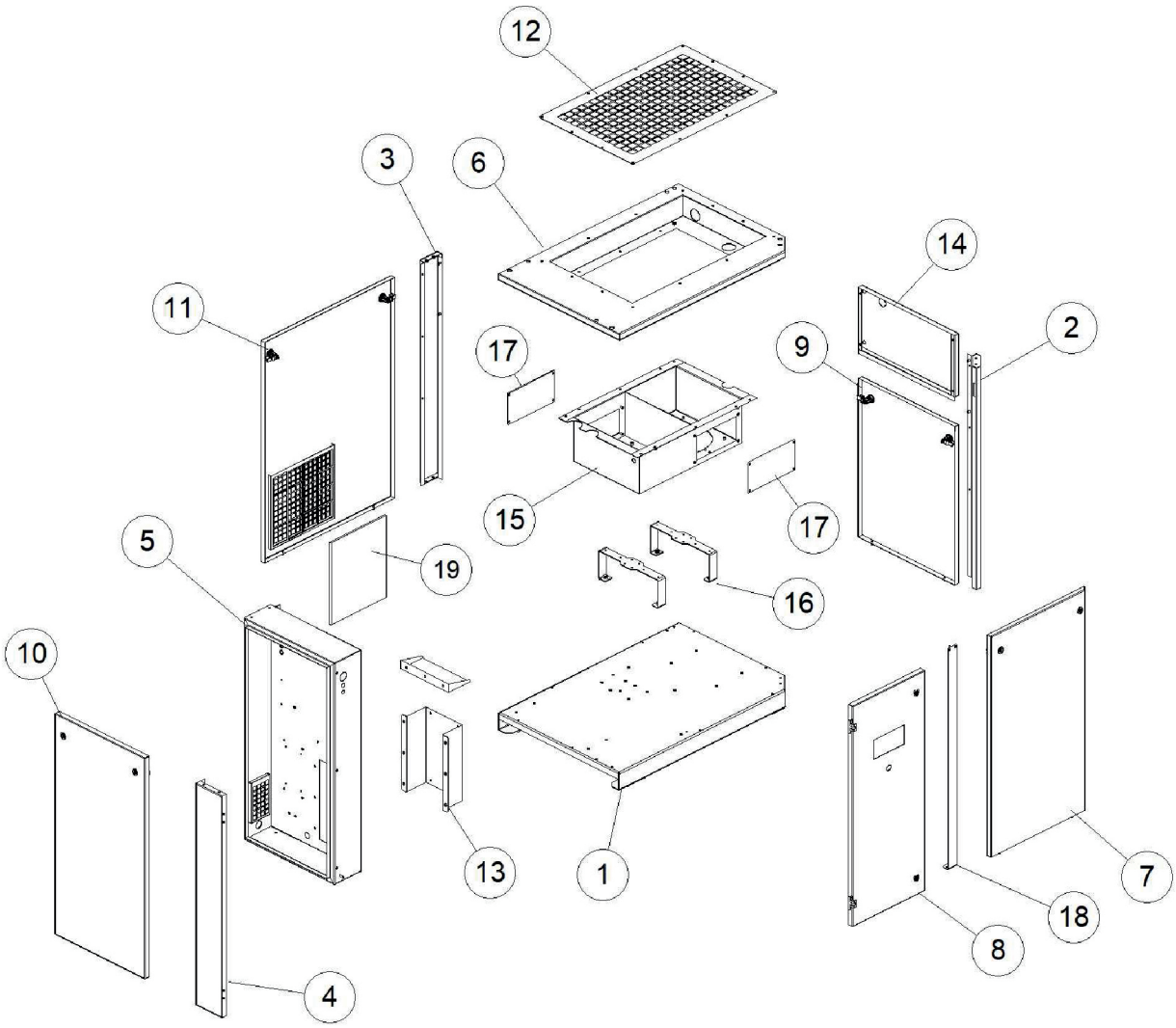

COMPLETE CABIN PART LIST

NO.	Designation	Code SKU	Qty
1	Base	C160VH0001V88	1
2	Front right pillar assembly	C260VH0003V88	1
3	Right rear strut assembly	C260VH0005V88	1
4	Front left pillar assembly	C260VH0007V88	1
5	Electrical compartment nobel 15 AP 7040B	C160VH0012V88	1
6	Cover assembly	C260VH0008V88	1
7	Front panel assembly	C260VH0002V71	1
8	Electric cab panel nobel 15 AP 5002B	C160VH0015V71	1
9	Right side panel assembly	C260VH0004V71	1
10	Left side panel assembly	C260VH0009V71	1
11	Rear panel assembly	C260VH0006V71	1
12	Grid panel	C160VH0011V88	1
13	Inverter compartment nobel 15 AP 7040B	C160VH0014V88	1
14	Right side panel assembly	C260VH0010V71	1
15	Fan conveyor	C160VH0020V88	1
16	Fan support bracket ø250 7040B	C160VH0016V88	2
17	Sheet metal conveyor closure nobel 15 AP 7040B	C160VH0021V88	2
18	Central pillar nobel 15 AP 7040B	C160VH0017V88	1
19	Pre-filter 340 x 325 x 15 PPI10	C160VH0050	1

ELECTRIC CABINET

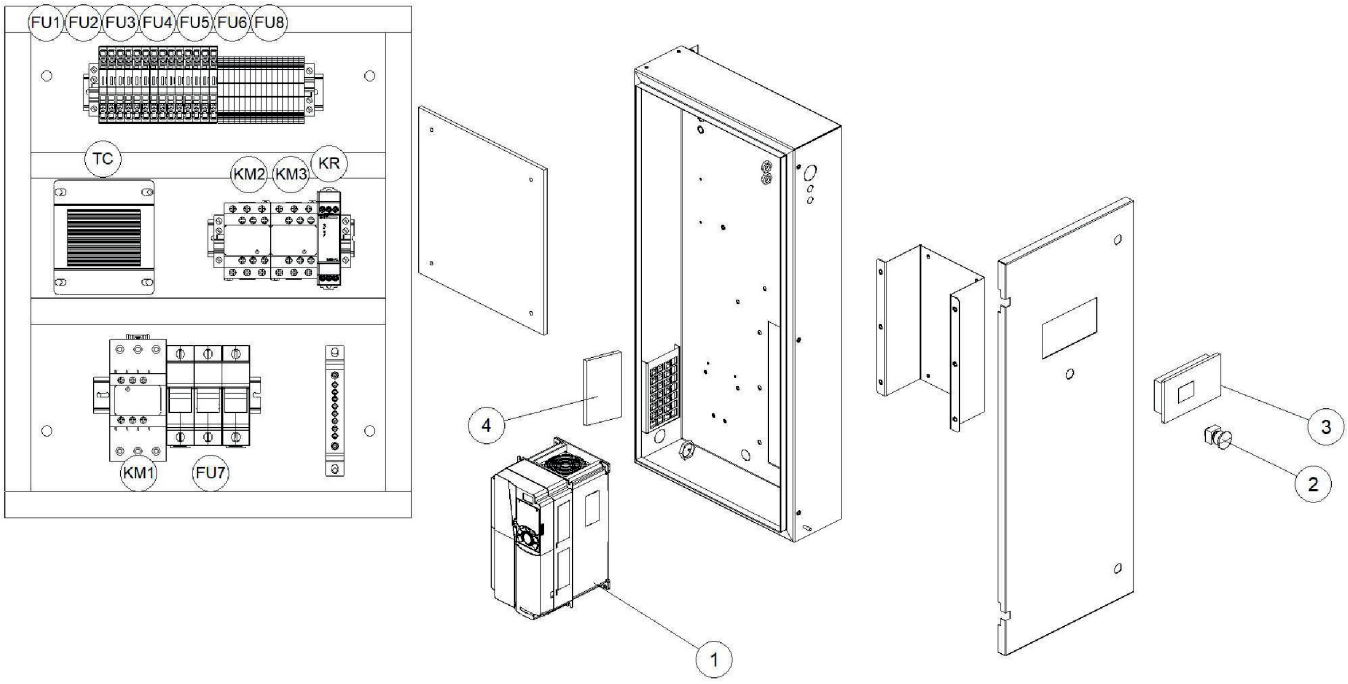

ELECTRIC CABINET PART LIST

NO.	Designation	Code SKU	Qty
TC	Transformer. JBK5 110VA	C005800002	1
KR	NJB1-X1 phase sequence relay 200 - 500 V	C005800011	1
FU1	Fuse 6,3x32 (500 V) 1-T	C005800007	2
KM1	Contactor 38 A 24 V N0 AC3 LC1D38B7C	C005800013	1
1	Inverter GD350A-011G/15P-4	C305453100	1
FU2	Fuse 6.3x32 (500 V) 500MA-F	C005800004	3
KM2	Contactor 9 A 24 V N0 AC3 LC1D09B7C	C005800014	1
2	Emergency button	EOP270KIT216	1
FU3	Fuse 6,3x32 (500 V) 1A-F	C005800005	1
KM3	Contactor 9 A 24 V N0 AC3 LC1D09B7C	C005800014	1
3	Airvision One controller	3690002	1
FU4	Fuse 6,3x32 (500 V) 1A-F	C005800005	1
4	Pre-filter 100 x 180 x 15 PPI10	C160VH0051	1
FU5	Fuse 6,3x32 (500 V) 4A-F	C005800006	1
FU6	Fuse 6,3x32 (500 V) 1-T	C005800007	3
FU7	CH14-14x51 (500 V) 32A-F fuse	C005800008	3
FU8	Fuse 6.3x32 (500 V) 3.15A-F	C005800012	3

COMPRESSOR COMPONENT

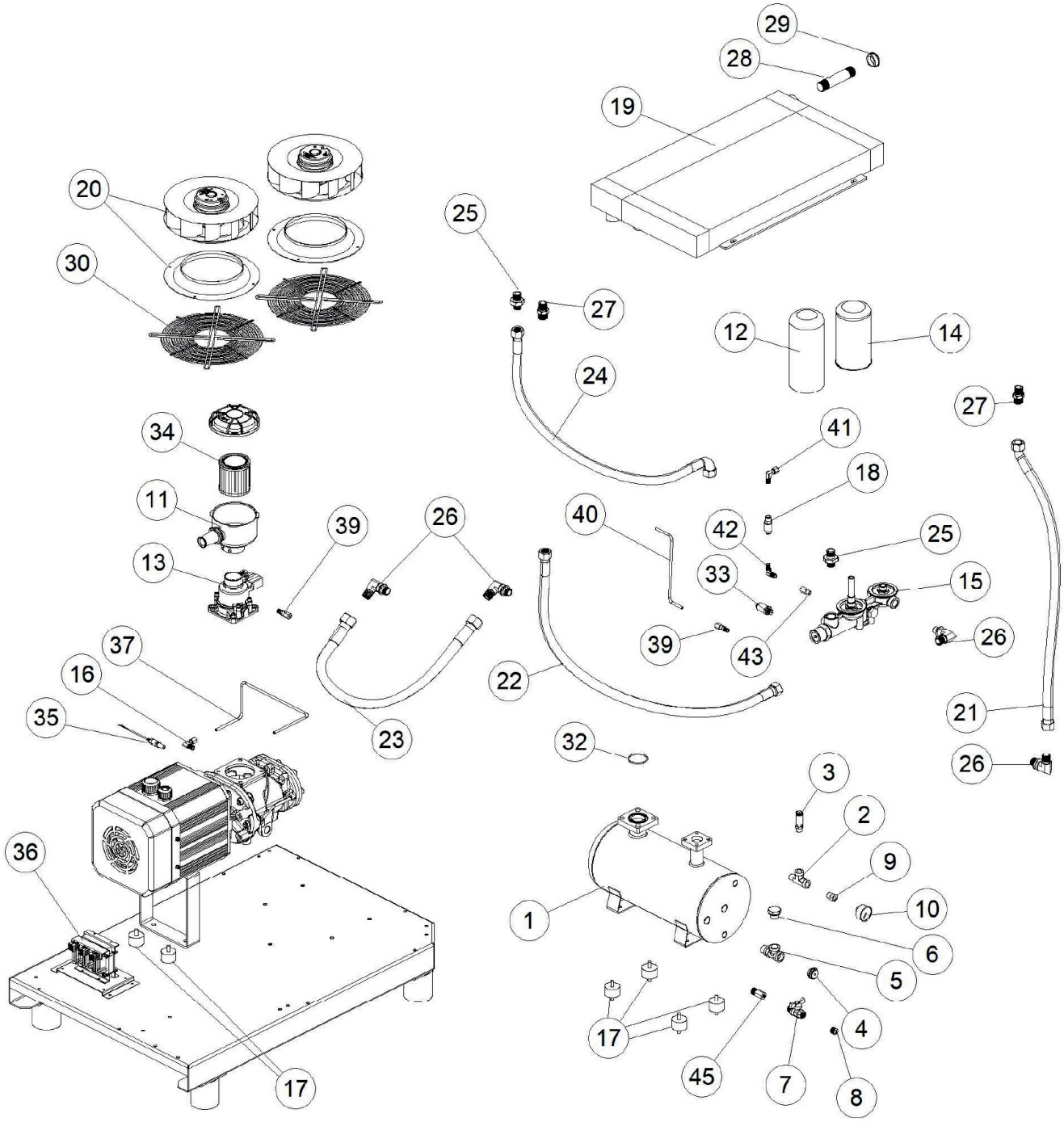

COMPRESSOR COMPONENT PART LIST

NO.	Designation	Code SKU	Qty
1	Oil separator tank L12/14B 7021B new	C160PU0024V82	1
2	Tee fitting mff r 3/8”	C011000472	1
3	Safety valve CE 3/8" 13 bar	9049365	1
4	Oil level indicator 1/2" HP all.	9411267	1
5	T line fitting mff r 1/2" t.Leg	C011353002	1
6	Hexagon plug m 1/2" with sfitao + grub screw	C011999006	1
7	Tap ball valve 3/8 m oil drain	C012023010	1
8	Gas cap EI RoHs 3/8”	9050624	1
9	Extension r 3/8”- RC 1/4	C011000473	1
10	Pressure gauge 50 r 1/4 m	9052807	1
11	Air filter assembly	C317090010	1
12	Oil air separator cartridge	F6105790	1
13	***Go to suction unit**		
13	Suction unit	C319310000	1
14	Oil filter	B472950	1
15	***Go to separator block**		
15	Separator block assembly	C347107120	1
16	Elbow fitting 1/8" - 6 mm	C011000459	1
17	Anti vibration PAD	C020027110	6
18	Oil drain viewer	C002174010	1
19	Nobel air-oil cooler 11 kW	C048540020	1
20	Centrifugal fan	C024110020	2
21	Flex L850 oilo radiator outlet hose	C160HE0100	1
22	Flex hose L1100 radiat. Oil	C160HE0101	1
23	Flex L670 oil bypass hose	C160HE0102	1
24	Flex L900 air circuit bypass hose	C160HE0103	1
25	Straight fitting mm g 3/4” - M26x1.5	C011000465	2
26	Elbow fitting mm g 1/2” - M26x1.5	C011000466	4

COMPRESSOR COMPONENT PART LIST

NO.	Designation	Code SKU	Qty
27	Straight fitting mm g 1/2” - M26x1.5	C011000478	2
28	Air outlet nipple 3/4" 3/4" L130	C160HE0106	1
29	Air outlet gasket ID27 OD40	C160HE0104	1
30	Protection grid	C024101006	2
32	O-ring	C010054000	1
33	Pressure sensor 0-16B 4-20MA	C008167020	1
34	Element air filter	B473950	1
35	Temperature sensor	C008333300	1
36	Ballast 11kW / 30 A / CE / 0.467 mH	C005457130	1
37	Iron tube	C160HE0152	1
39	Straight fitting 1/8" - 6 mm	C011000458	2
40	Iron tube	C160HE0151	1
41	Elbow fitting 1/8" - 6 mm	C011000459	1
42	Elbow fitting mm r 1/8” r 1/8”	C011000477	1
43	Extension r 1/8” - r 1/8” ID 4 mm L 30 mm	C011000479	1
45	Extension r 3/8” - RC 3/8	C011000468	1

SUCTION UNIT

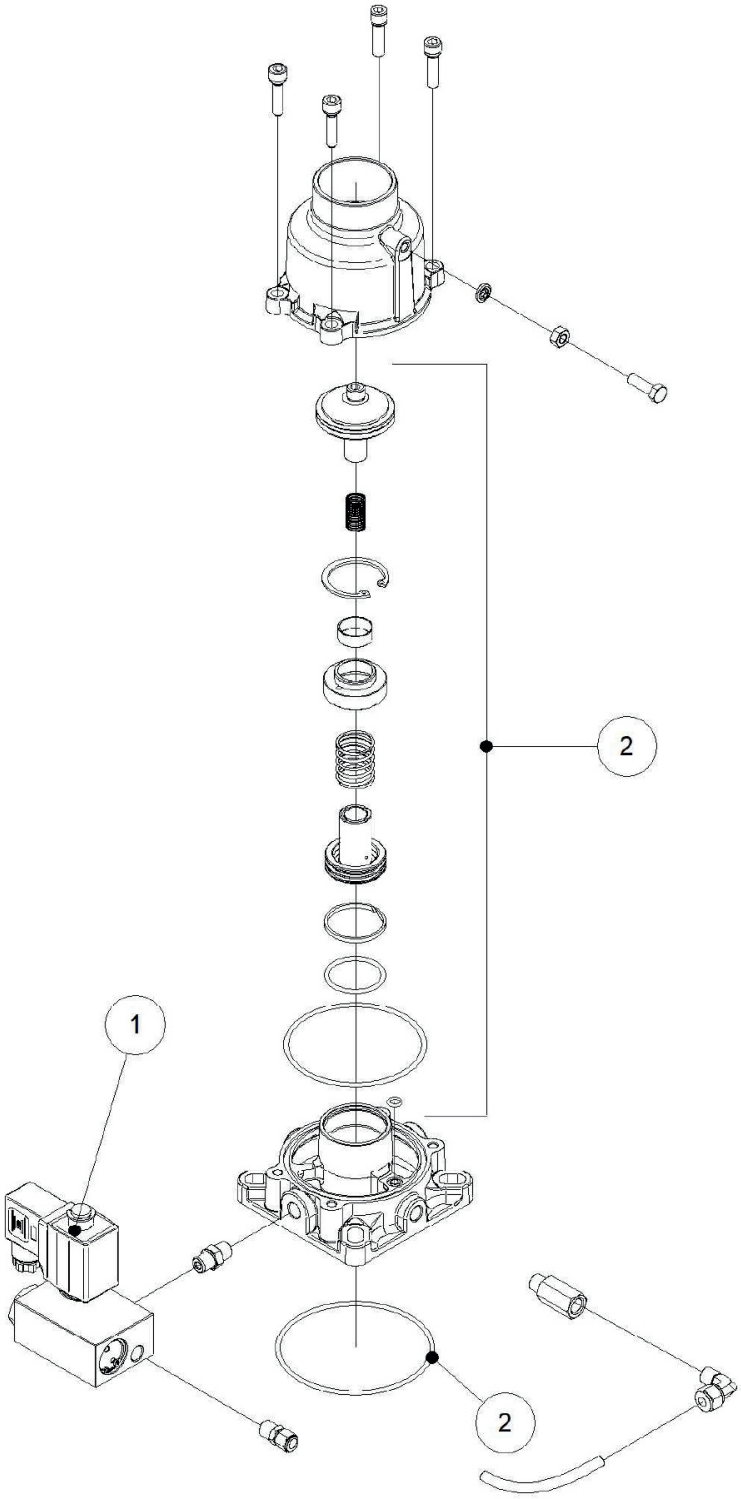

SUCTION UNIT PART LIST

NO.	Designation	Code SKU	Qty
1	Solenoid valve	C008640000	1
2	Elem kit. JIV-40B-E interior	C219310010	1

SEPARATOR BLOCK

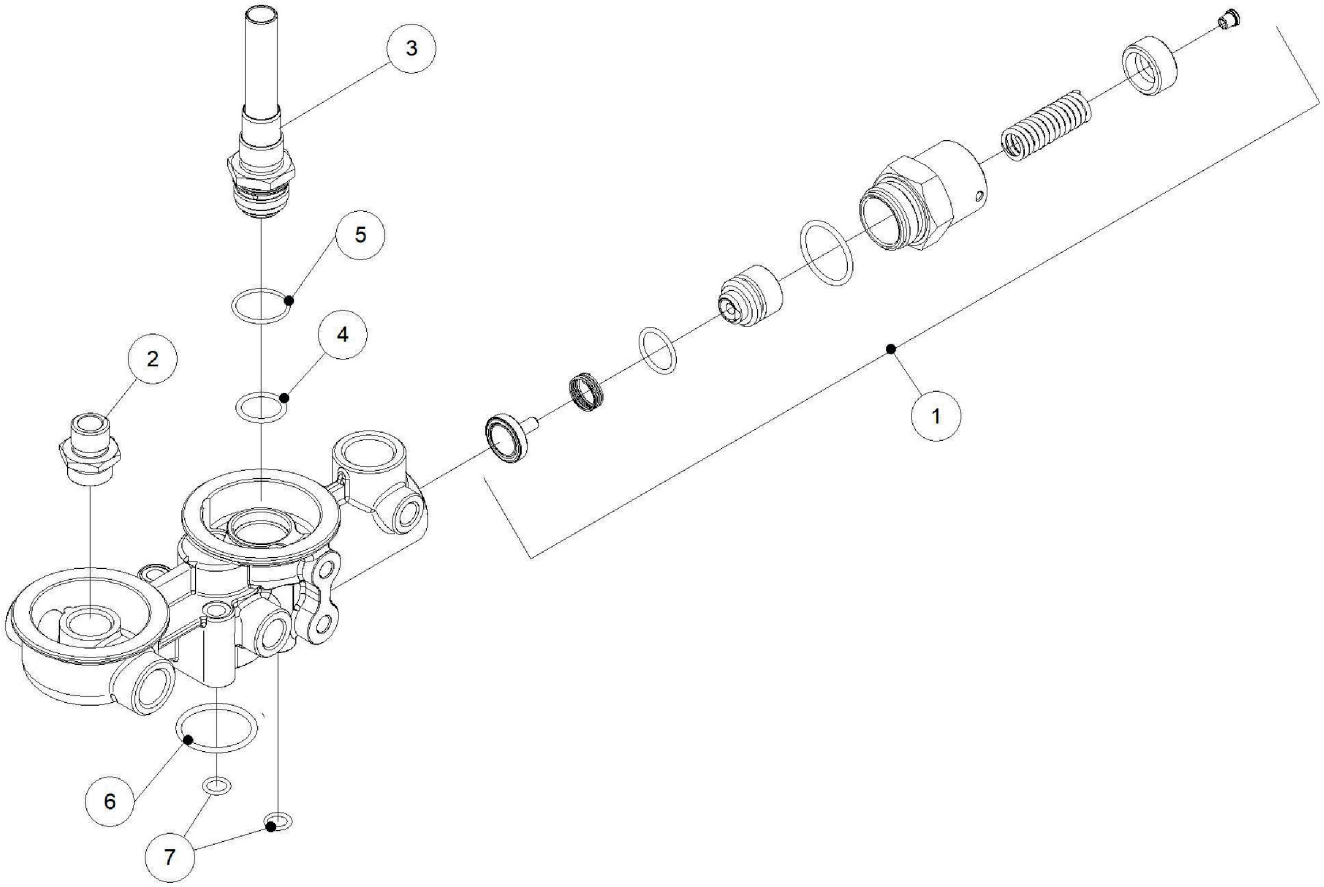

SEPARATOR BLOCK PART LIST

NO.	Designation	Code SKU	Qty
1	Minimum pressure valve separator CTV-20AJ-VG4	C347278000	1
2	Oil filter nipple CTV-20A-B	9050852	1
3	Filter nipple separator CTV-20A-B	9050853	1
4	O-ring	C010270000	1
5	O-ring	C010160000	1
6	O-ring	C010271000	1
7	O-ring	C010272000	2

TRANSMISSION COMPONENTS

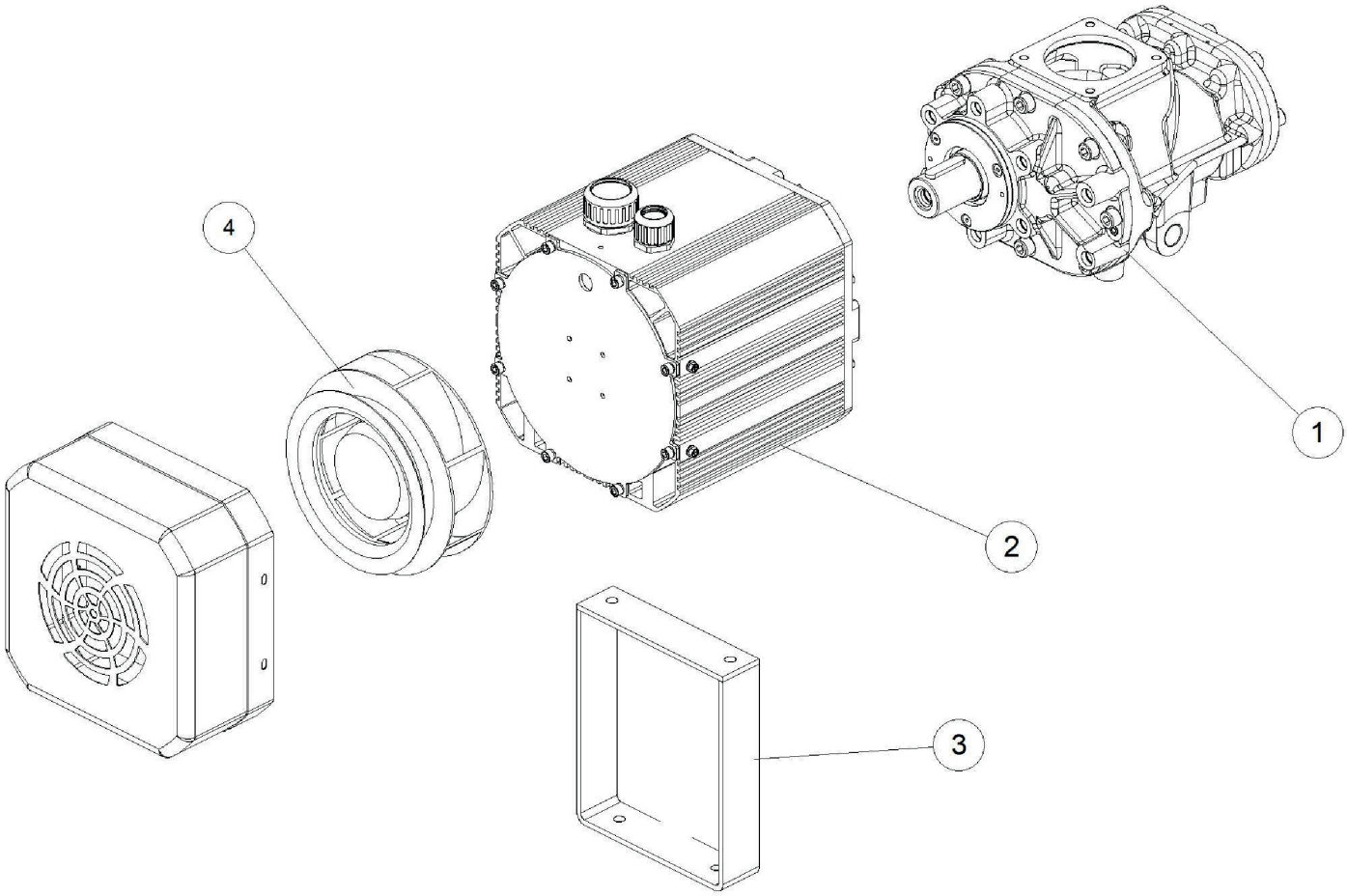

TRANSMISSION COMPONENTS PART LIST

NO.	Designation	Code SKU	Qty
1	Air-end X11-G3 - **go to AIR-END X11-G3**	C5304000005	1
2	Electric motor 11 kW IP55 380 V 3960 RPM	C540M400622PM	1
3	Motor support bracket 15 AP 7040B	C160VH0013V88	1
4	Motor cooling fan 11-15 kW (PM)	C024M40000	1

AIR-END X11-G3

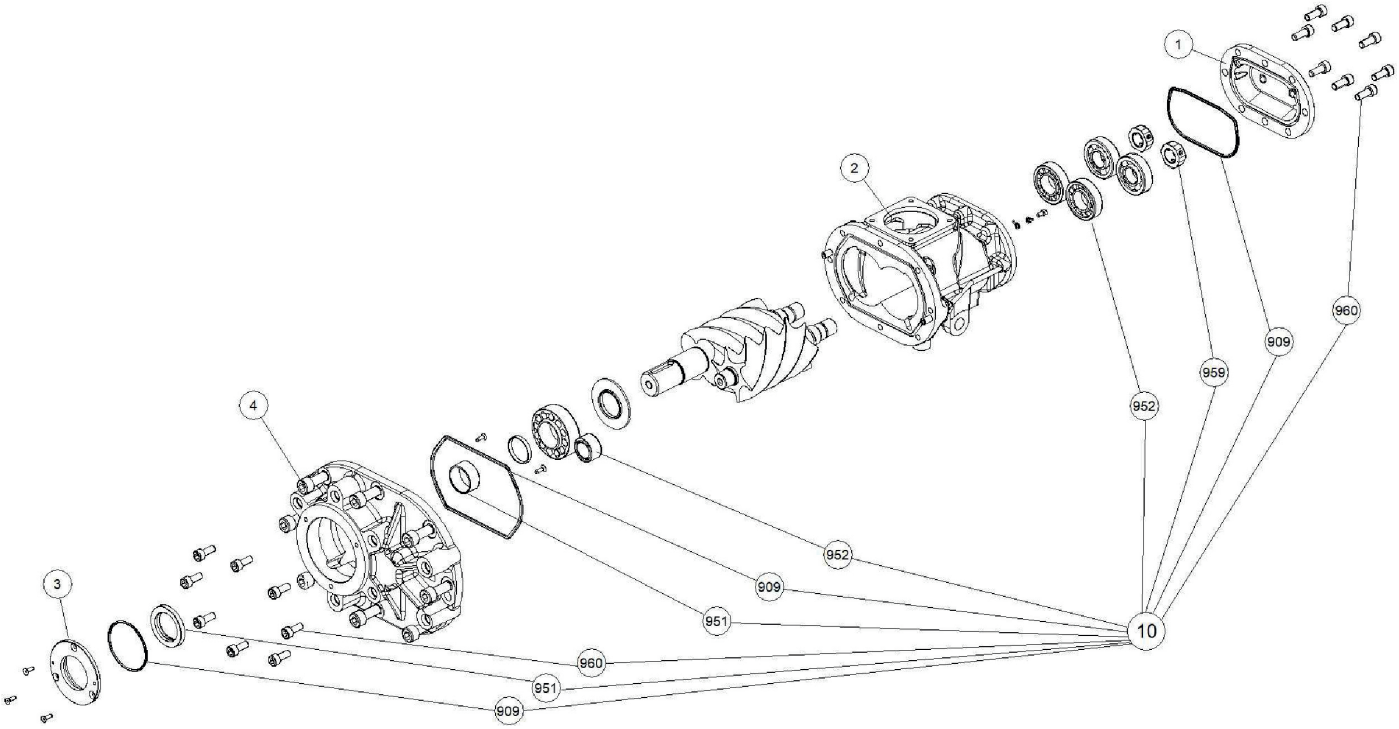

AIR-END X11-G3 PART LIST

NO.	Designation	Code SKU	Qty
1	Back cover	C130400003	1
2	Screw body	C130400004	1
3	Sealing ring support	C130400013	1
4	Bearing support	C130400015	1
10	Overhaul kit	C230400200	1
909	Gasket kit	C230400250	1
951	Seal ring kit	C230400240	1
952	Bearing kit	C230400230	1
959	Bezel kit	C230400210	1
960	Screw set	C230400220	1

369415-IVR-G3 SERVICE KITS

REF. NO.: 369415-IVR-G3

Designation	Code SKU	Qty
Servicekit A 2K 11 & 15 kW G3	**B902360**	
• Air filter element	B473950	1
• Oil filter	B472950	1
• Separator filter	F6105790	1
Servicekit B 4K 11 & 15 kW G3	**B902361**	
• Air filter element	B473950	1
• Oil filter	B472950	1
• Separator filter	F6105790	1
• Flow window monitor	C002174010	1
• Panel filter electrical cabinet	C160VH0051	1
• Panel filter back side	C160VH0050	1
Servicekit C 8K 11 & 15 kW G3	**B902362**	
• Air filter element	B473950	1
• Oil filter	B472950	1
• Separator filter	F6105790	1
• Flow window monitor	C002174010	1
• Panel filter electrical cabinet	C160VH0051	1
• Panel filter back side	C160VH0050	1
• Repair kit JIV-40B-E	C219310010	1
• Minimum pressure valve CTV-20AJ-VG4	C347278000	1
• Solenoid valve	C008640000	1